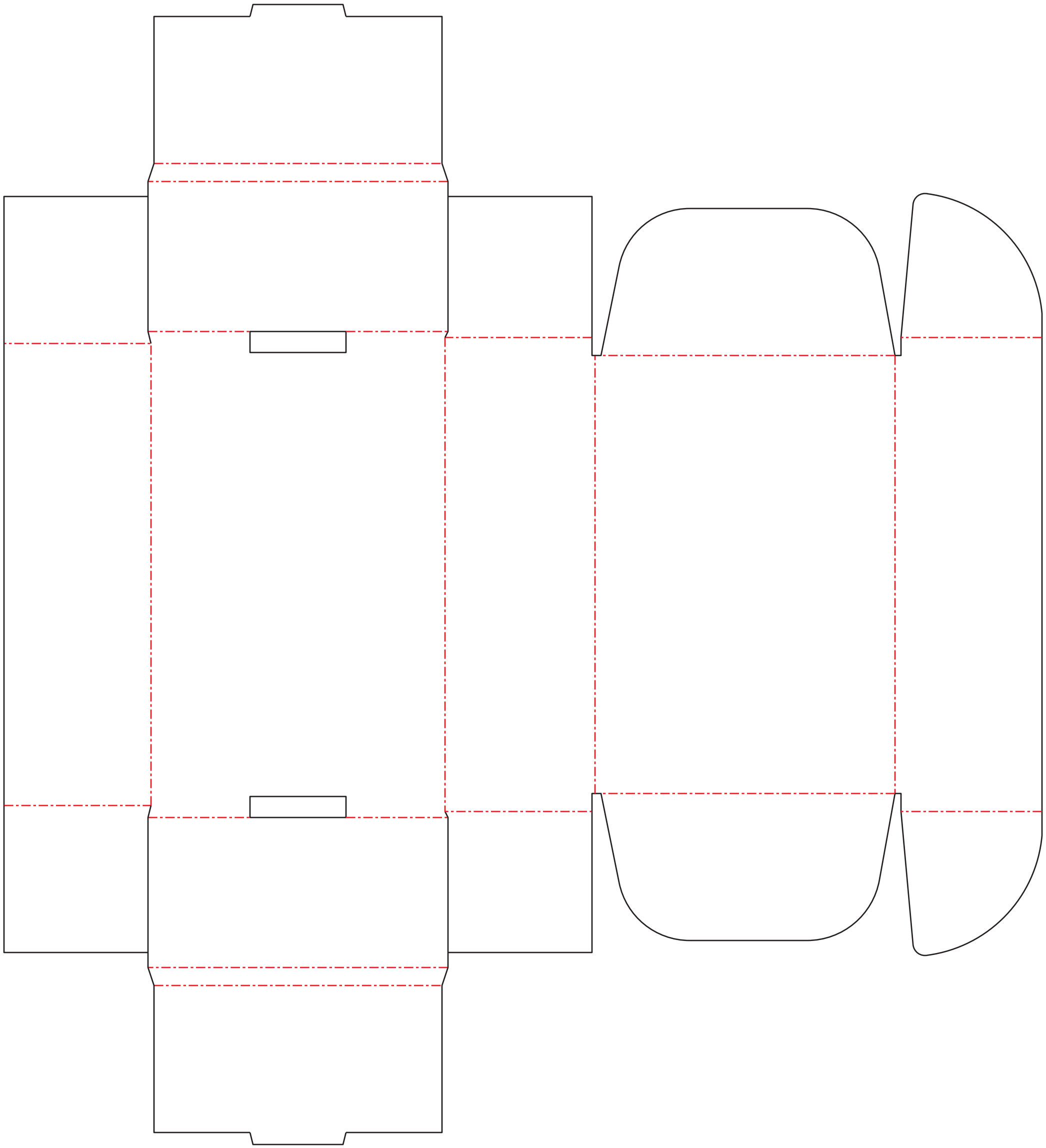

Bleed Line

Crease/Fold Line

Cut line

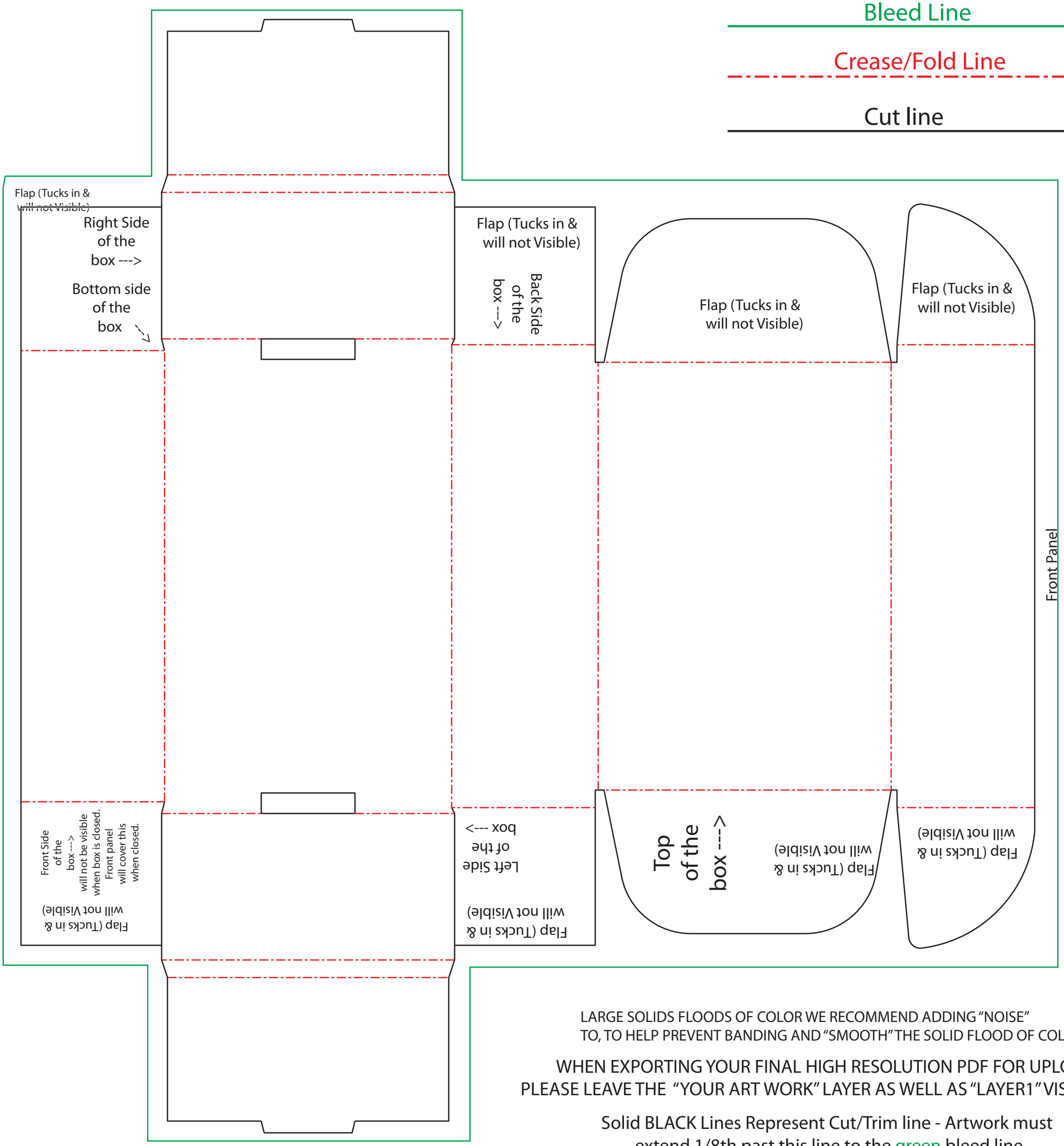

LARGE SOLIDS FLOODS OF COLOR WE RECOMMEND ADDING "NOISE"
TO, TO HELP PREVENT BANDING AND "SMOOTH" THE SOLID FLOOD OF COLOR

WHEN EXPORTING YOUR FINAL HIGH RESOLUTION PDF FOR UPLOAD
PLEASE LEAVE THE "YOUR ART WORK" LAYER AS WELL AS "LAYER1" VISIBLE

Solid BLACK Lines Represent Cut/Trim line - Artwork must
extend 1/8th past this line to the green bleed line

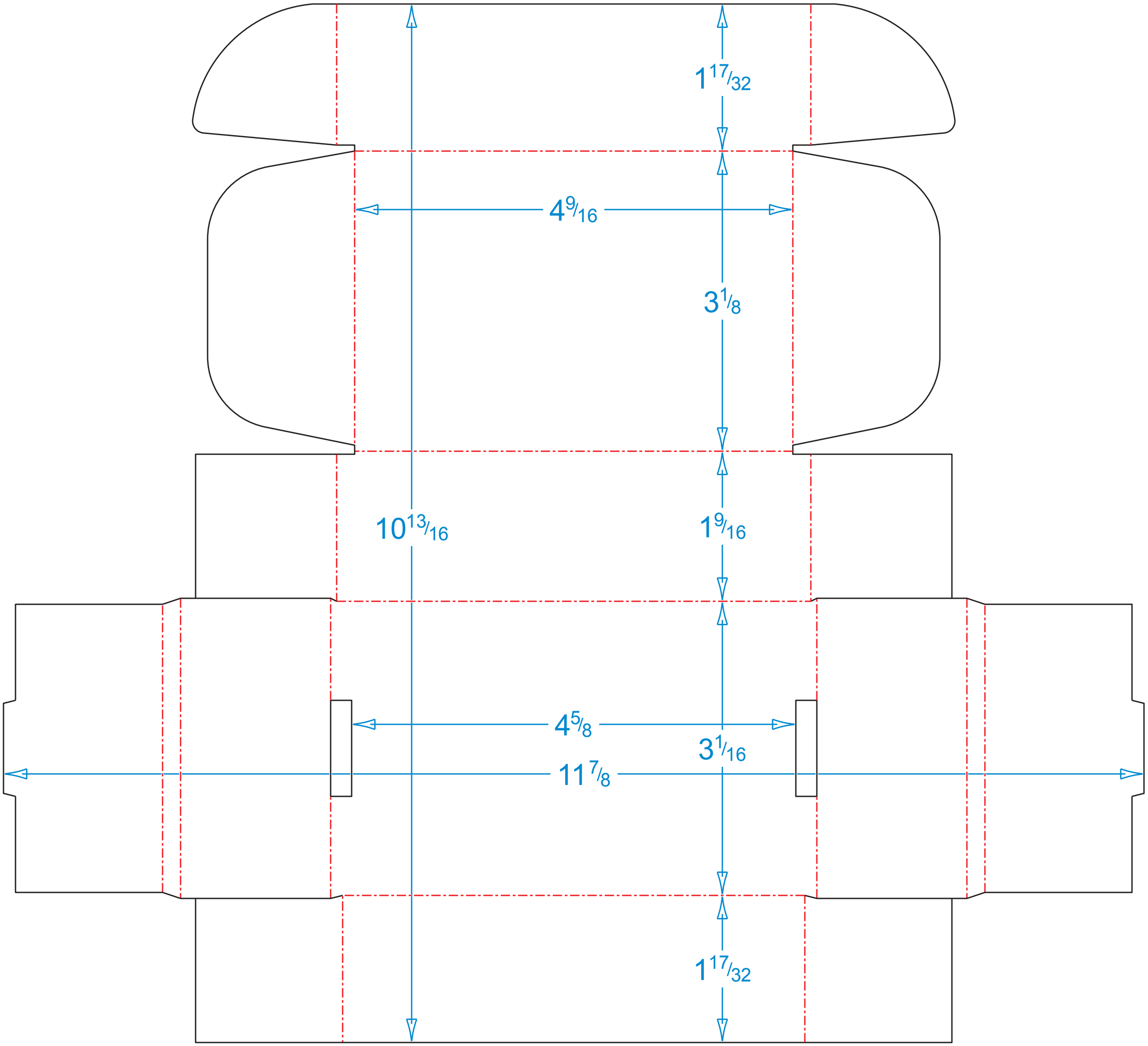
1 17/32
4 9/16
3 1/8
10 13/16
1 9/16
4 5/8
3 1/16
11 7/8
1 17/32